State Space Averaging Technique of Power Converter with Digital PID Controller

M. F. N. Tajuddin, N. A. Rahim, I. Daut, B. Ismail and M. F. Mohammed
School of Electrical System Engineering
Universiti Malaysia Perlis
01000 Kangar, Perlis, Malaysia

***Abstract*—This paper describes a digital Proportional-Integral-Derivative (PID) controller technique applied to the DC-DC buck converter. The converter is modelled using a state space averaging technique. Due to the non-linear of the power converter, the PID controller is designed to simplify the compensation of the DC-DC converter. The control algorithm is implemented in Digital Signal Processor (DSP) TMS320F2812. The steady state and dynamic response performances of the controller are demonstrated. Experimental results are provided to demonstrate the effectiveness of the design.**

Keywords-State-space averaging technique; digital PID controller; buck converter

I. INTRODUCTION

Switching-mode converters are widely used today to provide power processing for applications ranging from computing and communications to medical electronics, appliance control, transportation, and high-power transmission. Originally distributed regulated converters were used in mission-critical space applications, where reliable operation was of prime concern [1]. These converters are nonlinear dynamical systems. The nonlinearities arise primarily due to switching, power devices, and passive components, such as inductors, and parasitic. The static conservation properties of the elementary switching converters (buck, boost, and buck-boost) have been thoroughly understood since the early 1970s. This is one of the main reasons of their ever-increasing number of applications in electrical energy conversion. Modeling and analysis of switching DC-DC converters can be either numerical or analytical. In numerical techniques, various algorithms or circuit simulators are used to produce quantitative results. These methods are easy to use. They posses accuracy and universality and they are applicable when no equivalent model is available. However, they are time-consuming and fail to provide the design insight needed to understand the behavior of switching regulators. Analytic techniques, on the other hand, provide analytic expressions representing the operation and performance of the converters. Perhaps the most popular continuous-time technique is the small-signal analysis, which uses either, circuit averaging [2], state-space averaging [3], or PWM switch modeling [4].

The PID control method can be implemented digitally or analog to control parameters of converter such as voltage, current, etc. In analog control, analog components such as resistors, capacitors, inductors and operational-amplifiers is used for implementation of controlling algorithm, while in digital control, microprocessors are used and controlling algorithm can be programmed and feed to microprocessor. Digital control system offer many advantages over their analog counterparts [5]. An important advantage offered by digital control is in the flexibility of its modification controller characteristics, or of adopting the controller if plant dynamics change with operating conditions. The ability to redesign the controller by changing the software (rather than hardware) is an important feature of digital control as against analog control. Furthermore microprocessors are much less prone to environmental conditions than capacitors, inductors, etc. The programs can scale to the limits of the memory or storage space without extra cost and parameters of the program can be changed with time. This paper demonstrated the effectiveness of the digital PID control applied to the state space averaging DC-DC converter model. The control algorithm is implemented in DSP TMS320F2812.

II. MODELLING OF DC-DC SWITCHING POWER CONVERTER

The inherent switching operation of power electronic converters results in the circuit components being connected together in periodically changing configurations, each configuration being described by a separate set of equations. The transient analysis and control design for converters is therefore difficult since a number of equations must be solved in sequence. The technique of averaging provides a solution to this problem. A single equation may be formed to describe the converter approximately over a number of switching cycles by simply taking a linearly weighted average of the separate equations for each switched configuration of the converter. State space averaging [3, 6] is the most common averaging technique, and is used here to model the switching DC-DC converter.

A. Averaging Small-Signal Modelling

In state-space averaging (SSA), the switching circuit is divided into two (CCM) or three (DCM) different structures. The derivatives of inductor currents and capacitor voltages are defined based on circuit theory for every substructure. These currents and voltages are averaged over one switching cycle. The state space representation for a voltage-mode controlled-buck converter shown in Fig. 1 will be derived next.

Authorized licensed use limited to: Universidade Tecnologica Federal do Parana. Downloaded on April 05,2026 at 17:15:34 UTC from IEEE Xplore. Restrictions apply.

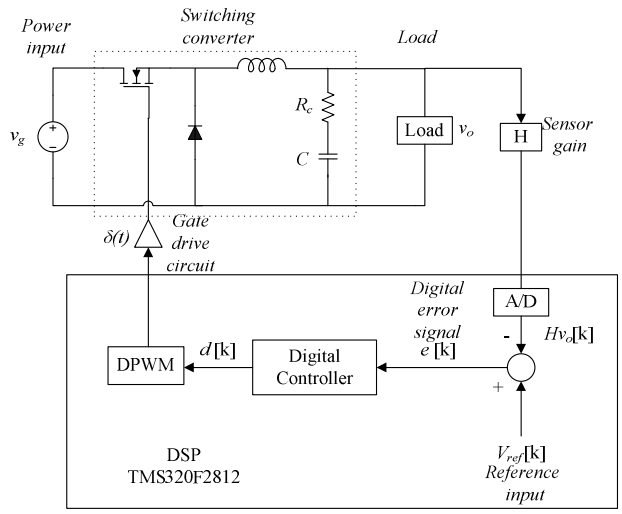

Figure 1. Example Buck Converter with Digital Controller

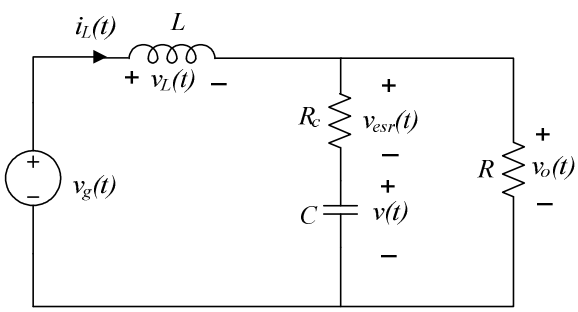

Figure 1(a). The circuit of Buck converter during, t_{on}

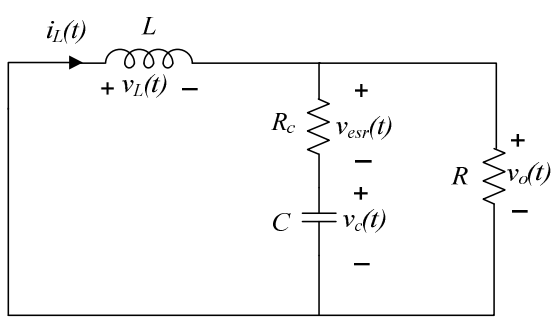

Figure 1(b). The circuit of Buck converter during, t_{on}

During the on time, the switch is on, and the diode is off. Therefore, the corresponding sub-circuit is as shown in Fig. 1(a). Applying Kirchhoff's Voltage Law (KVL) and Kirchhoff's Current Law (KCL) the following equations are obtained.

$$\frac{di_L(t)}{dt} = \frac{1}{L}\left[v_g(t) - v_o(t)\right] \tag{1a}$$

$$\frac{dv(t)}{dt} = \frac{1}{C}\left[i_L(t) - \frac{v_o(t)}{R}\right] \tag{1b}$$

$$v_o(t) = v(t) + R_C\left[i_L(t) - \frac{v_o(t)}{R}\right] \tag{1c}$$

Rearranging (1c) yields:

$$v_o(t) = \frac{RR_C}{R+R_C} i_L(t) + \frac{R}{R+R_C} v(t) \tag{1d}$$

Substituting $v_o(t)$ in (1d) into (1a) and (1b) yields:

$$\frac{di_L(t)}{dt} = \frac{1}{L} v_g(t) - \frac{R}{L(R+R_C)} v(t) - \frac{RR_C}{L(R+R_C)} i_L(t) \tag{1e}$$

$$\frac{dv(t)}{dt} = \frac{R}{(R+R_C)} i_L(t) - \frac{1}{C(R+R_C)} v(t) \tag{1f}$$

The voltage across the diode is equal to zero when the MOSFET is off. Therefore during, t_{off} the circuit in Fig. 1(b) can be used as a model of the Buck converter. If, $v_g(t)$ is equal to zero, the circuit in Fig. 1(a) and Fig. 1(b) are actually the same. As a result, a state space model when the switch is off can be carried out by setting $v_g(t)$ equal to zero in (1e). By setting $v_g(t)$ equal to zero yields:

$$\frac{di_L(t)}{dt} = -\frac{R}{L(R+R_C)} v(t) - \frac{RR_C}{L(R+R_C)} i_L(t) \tag{2}$$

The inductor current, $i_L(t)$ and capacitor voltage, $v(t)$ are chosen as the state variables. $v_g(t)$ is chosen as an input signal while $v_o(t)$ as the output signal. Using Equations (1d), (1e) and (1f), the following state space system is obtained during t_{on}:

$$\begin{aligned} \dot{\boldsymbol{x}}(t) &= \boldsymbol{A_1} x(t) + \boldsymbol{B_1} v_g(t) \\ v_o(t) &= \boldsymbol{C_1} x(t) \end{aligned} \tag{3}$$

where

$$\boldsymbol{x}(t) = \frac{d\boldsymbol{x}(t)}{dt} \tag{4}$$

$$\boldsymbol{x}(t) = [i_L(t) \quad v(t)]^T \tag{5}$$

$$\boldsymbol{A_1} = \begin{bmatrix} -\frac{RR_C}{L(R+R_C)} & -\frac{R}{L(R+R_C)} \\ \frac{R}{C(R+R_C)} & \frac{1}{C(R+R_C)} \end{bmatrix} \tag{6}$$

$$\boldsymbol{B_1} = [1/L \quad 0]^T \tag{7}$$

$$\boldsymbol{C_1} = \begin{bmatrix} \frac{RR_C}{R+R_C} & \frac{R}{R+R_C} \end{bmatrix} \tag{8}$$

Using (1d), (1f) and (2), the following state space system is obtained for the circuit in during off time:

$$\begin{aligned} \dot{\boldsymbol{x}}(t) &= \boldsymbol{A_2} x(t) + \boldsymbol{B_2} v_g(t) \\ v_o(t) &= \boldsymbol{C_2} x(t) \end{aligned} \tag{9}$$

Authorized licensed use limited to: Universidade Tecnologica Federal do Parana. Downloaded on April 05,2026 at 17:15:34 UTC from IEEE Xplore. Restrictions apply.

where

$$\boldsymbol{A_2} = \boldsymbol{A_1} \tag{10}$$

$$\boldsymbol{B_2} = [0 \quad 0]^T \tag{11}$$

$$\boldsymbol{C_2} = \boldsymbol{C_1} \tag{12}$$

The averaged state-space equations can be obtained by multiplying (3) and (9) by the duty cycle, d and $d' = 1 - d$ respectively, and the resulting equations are added together as follows

$$\begin{aligned} \dot{\boldsymbol{x}}(t) &= [d(t)\boldsymbol{A_1} + (1 - d(t)\boldsymbol{A_2})]\boldsymbol{x}(t) \\ &\quad + [d(t)\boldsymbol{B}_1 + (\boldsymbol{1} \\ &\quad - \boldsymbol{d})\boldsymbol{B_2}]v_g(t) \\ v_o(t) &= [d(t)\boldsymbol{C_1} + (1 - d)\boldsymbol{C_2}]\boldsymbol{x}(t) \end{aligned} \tag{13}$$

By taking the average of the two linear equations, a set of nonlinear continuous equations (13) is obtained. This equation is an approximation of the time-variant system.

To study the small signal behaviour, the time varying system described in (13) can be linearized using perturbation technique. Small ac perturbations are introduced in the dc steady state quantities. Capital letters denote the operating-point (dc, steady-state) values and the hat-symbol (^) denotes perturbation (ac) signals.

$$\boldsymbol{x}(t) = \boldsymbol{X} + \hat{\boldsymbol{x}}(t) \tag{14}$$

$$v_o(t) = V_o + \widehat{v_o}(t) \tag{15}$$

$$d(t) = D + \hat{d}(t) \tag{16}$$

In general $v_g(t) = V_g + \widehat{v_g}(t)$. However to obtain the transfer function between output voltage, $v_o(t)$ and duty ratio, $d(t)$, the perturbation $v_g(t)$ is assumed to be zero in the input voltage to simplify the analysis. Therefore,

$$v_g(t) = V_g \tag{17}$$

Substitution of (14)-(16) into (13) yields:

$$\begin{aligned} \frac{d[\boldsymbol{X} + \hat{\boldsymbol{x}}(t)]}{dt} &= \{[D + \hat{d}(t)]\boldsymbol{A_1} \\ &\quad + [D' + \widehat{d'}(t)]\boldsymbol{A_2}\}[\boldsymbol{X} + \hat{\boldsymbol{x}}(t)] \\ &\quad + \{[D + \hat{d}(t)]\boldsymbol{B_1} \\ &\quad + [D' + \widehat{d'}(t)]\boldsymbol{B_2}\}V_g \end{aligned} \tag{18}$$

$$\begin{aligned} V_o + \hat{v}_o(t) &= \{[D + \hat{d}(t)]\boldsymbol{C_1} \\ &\quad + [D' + \widehat{d'}(t)]\boldsymbol{C_2}\}[\boldsymbol{X} + \hat{\boldsymbol{x}}(t)] \end{aligned} \tag{19}$$

Small signal analysis starts by recognizing that the derivative of steady state component, $\frac{d\boldsymbol{X}}{dt}$ is zero. By collecting term

$$\begin{aligned} \frac{d\hat{\boldsymbol{x}}(t)}{dt} &= \underbrace{(\boldsymbol{AX} + \boldsymbol{B}V_g)}_{DC\ term} \\ &+ \underbrace{\boldsymbol{A}\hat{\boldsymbol{x}}(t) + \{[\boldsymbol{A_1} - \boldsymbol{A_2}]\boldsymbol{X} + [\boldsymbol{B_1} - \boldsymbol{B_2}]V_g\}\hat{d}(t)}_{First\ order\ AC\ terms} \\ &+ \underbrace{(\boldsymbol{A_1} - \boldsymbol{A_2})\hat{\boldsymbol{x}}(t)\hat{d}(t)}_{Second\ order\ nonlinear\ terms} \end{aligned} \tag{20}$$

$$\begin{aligned} &V_o + \hat{v}_o(t) \\ &DC + First\ order\ AC \\ &= \underbrace{\boldsymbol{CX}}_{DC\ term} + \underbrace{C\hat{\boldsymbol{x}}(t) + \{[(\boldsymbol{C_1} - \boldsymbol{C_2})]X\}\hat{d}(t)}_{First\ order\ AC\ terms} \end{aligned} \tag{21}$$

where

$$\boldsymbol{A} = \boldsymbol{A_1}d + \boldsymbol{A_2}d' \tag{22}$$

$$\boldsymbol{B} = \boldsymbol{B_1}d + \boldsymbol{B_2}d' \tag{23}$$

$$\boldsymbol{A} = \boldsymbol{C_1}d + \boldsymbol{C_2}d' \tag{24}$$

Assuming that departures of the states from their corresponding steady state values are small compared with the steady value themselves allows the second order terms in (22) to be neglected. The averaging model in its final form is shown below.

$$0 = \boldsymbol{AX} + \boldsymbol{B}V_g \tag{25}$$

$$V_o = \boldsymbol{CX} \tag{26}$$

The ac model:

$$\begin{aligned} \frac{d\hat{\boldsymbol{x}}(t)}{dt} &= \boldsymbol{A}\hat{\boldsymbol{x}}(t) + \big[(\boldsymbol{A_1} - \boldsymbol{A_2})\boldsymbol{X} \\ &\quad + (\boldsymbol{B_1} - \boldsymbol{B_2})V_g\big]\hat{d}(t) \end{aligned} \tag{27}$$

$$\widehat{v_o}(t) = \boldsymbol{C}\hat{\boldsymbol{x}} + [(\boldsymbol{C_1} - \boldsymbol{C_2})\boldsymbol{X}]\hat{d}(t) \tag{28}$$

Equations (25), (26, (27) and (28) represent the small-signal low frequency model of any two state switching DC to DC converter working in the continuous conduction mode.

B. Transformation of AC Equations into s-Domain to Extract the Transfer Functions

Equation (27) and (28) consists of the ac perturbation. Using laplace transformation in (27) and (28),

$$\begin{aligned} s\hat{x}(s) &= A\hat{x}(s) + \big[(\boldsymbol{A_1} - \boldsymbol{A_2})\boldsymbol{X} \\ &\quad + (\boldsymbol{B_1} - \boldsymbol{B_2})V_g\big]\hat{d}(s) \end{aligned} \tag{29}$$

$$\widehat{v_o}(t) = \boldsymbol{C}\hat{\boldsymbol{x}}(s) + [(\boldsymbol{C_1} - \boldsymbol{C_2})\boldsymbol{X}]\hat{d}(s) \tag{30}$$

Grouping $\hat{\boldsymbol{x}}(s)$in Equation (29) yields:

$$\begin{aligned} \hat{\boldsymbol{x}}(s) &= [s\boldsymbol{I} - \boldsymbol{A}]^{-1}\{(\boldsymbol{A_1} - \boldsymbol{A_2})\boldsymbol{X} \\ &\quad + (\boldsymbol{B_1} - \boldsymbol{B_2})V_g\}\hat{d}(s) \end{aligned} \tag{31}$$

Authorized licensed use limited to: Universidade Tecnologica Federal do Parana. Downloaded on April 05,2026 at 17:15:34 UTC from IEEE Xplore. Restrictions apply.

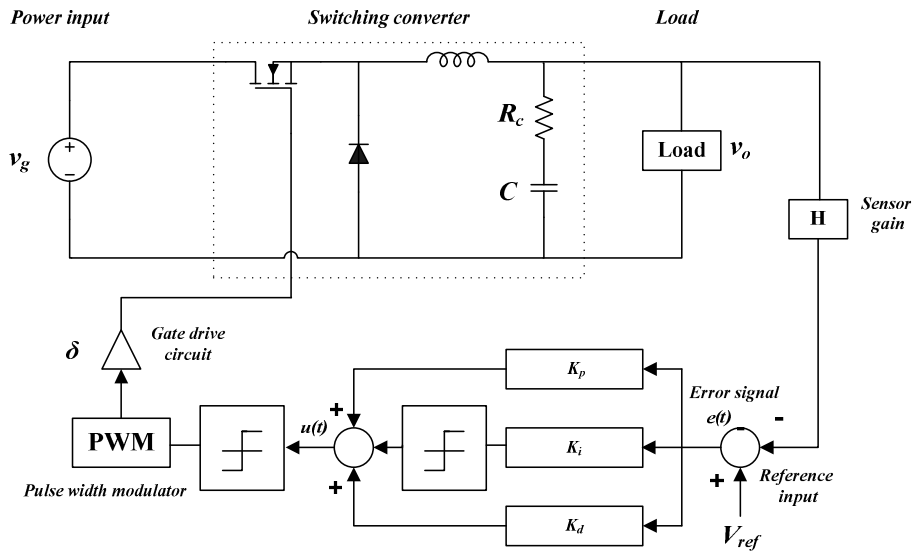

Figure 2. Block Diagram of Buck Converter with PID controller

where I is a unity matrix. Substituting x̂(s) in (30) results in

$$\widehat{v_o}(t) = \boldsymbol{C}[s\boldsymbol{I} - \boldsymbol{A}]^{-1}\{(\boldsymbol{A_1} - \boldsymbol{A_2})\boldsymbol{X} + (\boldsymbol{B_1} - \boldsymbol{B_2})V_g\}\hat{d}(s) + [(\boldsymbol{C_1} - \boldsymbol{C_2})\boldsymbol{X}]\hat{d}(s) \quad (32)$$

Therefore, the transfer function of output to variation in the duty cycle is expressed as

$$\frac{v_o(s)}{\hat{d}(s)} = \boldsymbol{C}[s\boldsymbol{I} - \boldsymbol{A}]^{-1}\left[(\boldsymbol{A_1} - \boldsymbol{A_2})\boldsymbol{X} + (\boldsymbol{B_1} - \boldsymbol{B_2})V_g\right] + [(\boldsymbol{C_1} - \boldsymbol{C_2})\boldsymbol{X}] \quad (33)$$

Substituting (6)-(12) into (33) yield the important small signal model for DC-DC Buck converter that will be used in designing the controller.

$$\frac{\hat{v}_o(s)}{\hat{d}(s)} = \frac{v_g}{LC}\left[\frac{1 + sR_C C}{s^2 + \left(\frac{1}{RC} + \frac{R_C}{L}\right) + \frac{1}{LC}}\right] \quad (34)$$

III. System Control

The feedback controller used in this application utilizes the PID algorithm as shown in Fig. 2. The converter output voltage, v_o is sensed and fed back to a comparator which compares with reference voltage, V_{ref} . The instantaneous current error , e is fed to a PID controller. The integral term in the PID controller improves the tracking by reducing the instantaneous error between the reference and the actual current. The resulting error signal U is compared with a triangular carrier signal and intersections are required to produce PWM signals for the inverter switches [7].

IV. Implementation of DSP Based PID Controller

The PID algorithm can be expressed in the discrete-time domain as:

$$u(k) = K_p e(k) + K_i' \sum_{i=0}^{k}[e(i) + e(i-1)] + K_d'[e(k) - e(k-1)] \quad (35)$$

where

K_p is the proportional mode control gain

K_i is the integral mode control gain

K_d is the derivative mode control gain

Time relationship: $t = k * h$

h is the sampling period

k is the discrete-time index: k = 0, 1, 2, …

$K_i' = K_i \frac{h}{2}$

$K_D' = \frac{K_d}{h}$

To eliminate the need to calculate the full summation each time step (which would require an ever increasing amount of computation as time goes on), the summation is expressed as a running sum:

$$sum(k) = sum(k-1) + [e(k) + e(k-1)] \quad (36)$$

$$u(k) = K_p e(k) + K_i' sum(k) + K_d'[e(k) - e(k-1)] \quad (37)$$

The flow chart in Fig. 3 shows steps involved in implementing digital PID control in DSP TMS320F2812.

Authorized licensed use limited to: Universidade Tecnologica Federal do Parana. Downloaded on April 05,2026 at 17:15:34 UTC from IEEE Xplore. Restrictions apply.

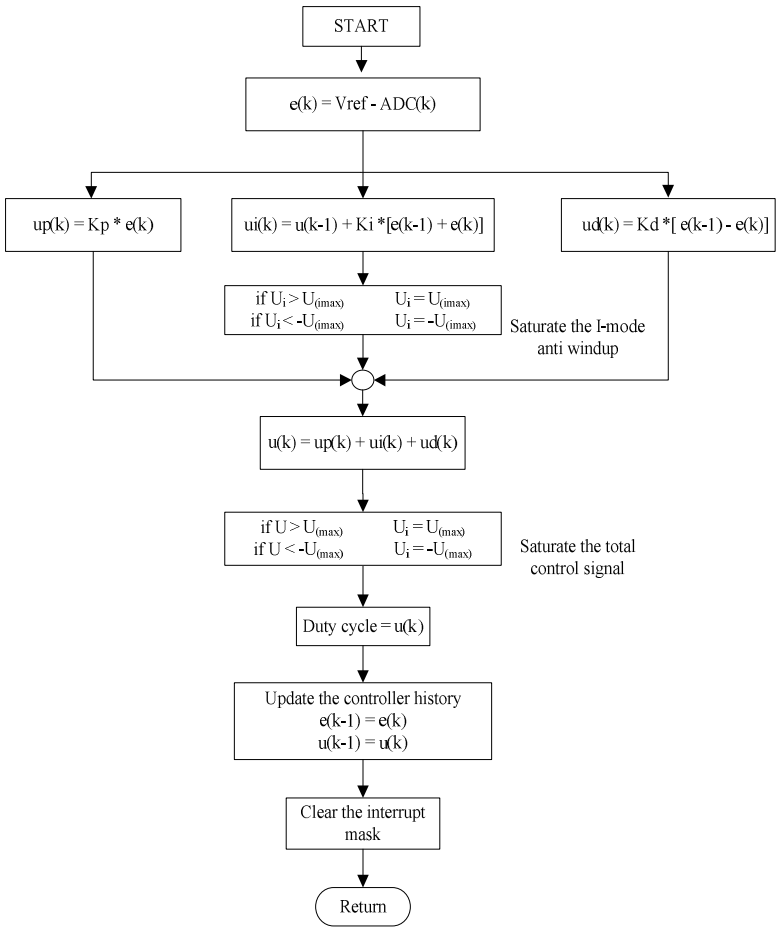

Figure 3. Flowchart of digital PID control in TMS320F2812

V. EXPERIMENTAL RESULTS

The proposed digital PID method is implemented in the DSP TMS320F2812. Table I shows the specifications of the DC-DC Buck converter implemented in this work. These parameters are calculated on the basis that the converter is to be operated in CCM for 20 V to 30 V input supply at 0.5 A to 2 A. The maximum peak to peak ripple voltage is 50 mV.

TABLE I. SPECIFICATION OF DC-DC BUCK CONVERTER

Parameter name	Symbol	Nominal Value / Spec. no
Input voltage	V_{g-H}	30V
	V_{g-L}	20V
Output voltage	V_o	12V
Output Capacitor	C	220μF
Inductor	L	2.12mH
Load resistance	R_L	18 Ω
Switching frequency	f_s	20kHz
Power MOSFET	M	IRF 530
Power diode	D	MUR 820

A. Open Loop Response

In the open loop system the voltage overshoot under load can be unsatisfactory. Fig. 4 shows the voltage response under open loop control during start up. It shows there is an oscillation and high overshoot in the voltage and current response in spite of the damping provided by the load resistance. It is also seen that the steady state error exist in the open loop system.

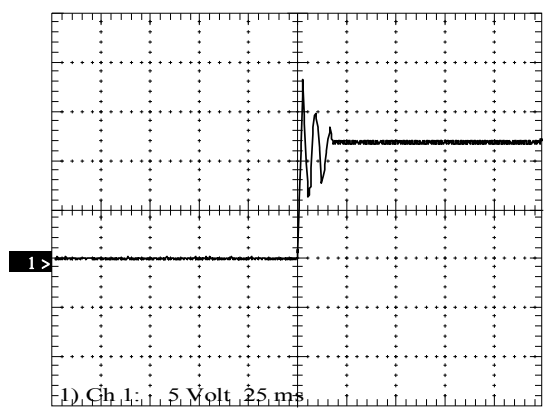

Figure 4. Open loop start up transient response of Buck Converter

Authorized licensed use limited to: Universidade Tecnologica Federal do Parana. Downloaded on April 05,2026 at 17:15:34 UTC from IEEE Xplore. Restrictions apply.

B. Closed Loop Response

PID controller improves the start up transient response performance of the converter. Fig. 5 shows the voltage response under feedback control during start up. It can be seen that there is no overshoot and that the settling time is improved. The system is more stable and able to maintain a constant output voltage.

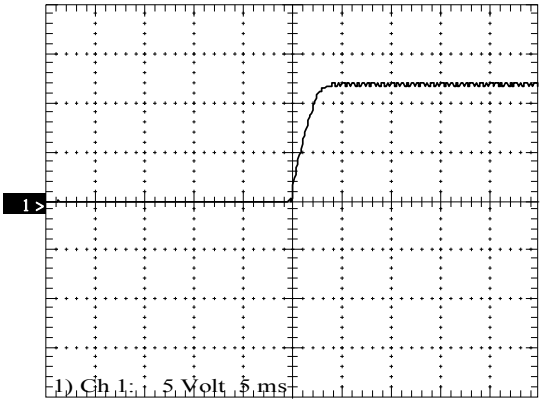

Figure 5. Start up transient response of Buck Converter with digital PID control

Fig. 6 displays the output voltage and current waveforms of the converter operating with the input voltage of 24V at half load. It can be proved that the system with PID controller produces the required output voltage and current. These results are in well agreement with the theoretical values.

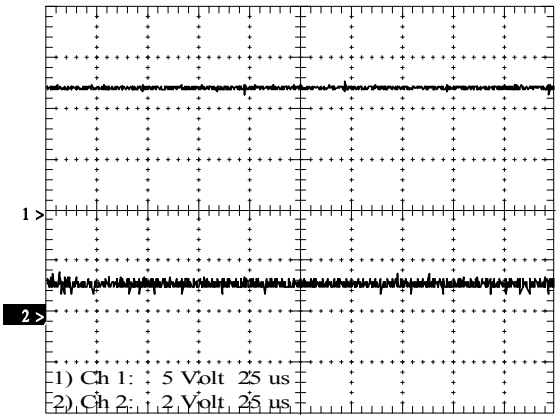

Figure 6. Waveforms of output voltage and current at steady state operation under nominal operating conditions

VI. Conclusion

This paper describes a Digital PID voltage-mode control method for DC-DC Buck converter. Although many voltage controlling methods are available but in fact, the PID controller is difficult to outperform for several reasons [8]. The integrator increases the system type number, thus minimizing steady-state error. Two zeros in the controller make it possible to dampen resonant characteristics and improve transient response. Compared to many other control philosophies, the PID controller structure is fairly easy to explain and understand.

To maintain its reliability, digital method was chosen since it has many advantages compared to analog method. It provides robust controlling method for the converter. To smooth the progress of implementing DSP based PID controller, the design guidelines for the controller is described in a flow chart. Experimental waveforms obtained have been used to validate the digital PID control method and its feasibility using DSP.

References

[1] Cho, B. H. (1985). *Modeling and Analysis of Spacecraft Power Systems, PhD Thesis*. Virginia Polytechnic Institute and State University. 181 p.

[2] Wester, G. W. and R. D. Middlebrook (1972). Low-frequency characterization of switched dc-dc converters. *IEEE Transactions on Aerospace and Electronics Systems* 9(3), 376-385.

[3] Middlebrook, R. D. and S. Cuk (1977). A general unifed approach to modelling switching-converter power stages. In: *Proceedings of Power Electronics Specialists Conference*. pp. 521-550.

[4] Vorperian, V. (1990). Part I: Continuous conduction mode, simplifed analysis of PWM converters using model of PWM switch. *IEEE Transactions on Aerospace and Electronics Systems* 26(3), 490-496.

[5] B. Duan, Y. and Jin, H. (1999). Digital controller design for switch mode power converters. *Conf. Procs. of the Fourteenth IEEE Applied Power Elect. Conf. and Exposition*. 2, 967 - 973.

[6] Mohan, N., T.M. Undeland and W. P. Robbins (1995). *Power electronics: converters, applications and design.* John Wiley & Sons, New York, 1995.

[7] David M.Alter.: "Thermoelectric cooler control using TMS320F2812 DSP and a DRV592 power amplifier" Texas Instruments Application Report.

[8] Y. Feng, Q., Nelms, R. M. and Hung, J. Y. (2006). Posicast-based digital control of the buck converter. *IEEE Trans. on Indust. Elect.*. 53(3), 759 - 767.

Authorized licensed use limited to: Universidade Tecnologica Federal do Parana. Downloaded on April 05,2026 at 17:15:34 UTC from IEEE Xplore. Restrictions apply.